APPENDIX C

LIGHT INFANTRY AND ARMORED VEHICLE TACTICS, TECHNIQUES, AND PROCEDURES

"…to breach these barricades and destroy (North Korean) defenders, the Marine and Army forces developed a highly effective combined arms team…Most UN forces quickly discovered that rifles or machine guns lacked the penetrating power and punch to overcome hardened (North Korean) barricade defenses."

Robert Tallent, "Street Fight in Seoul",
The Leathernecks: An Informal History of the US Marine Corps, as quoted in Armor Magazine, Sep-Oct 01

The first and most fundamental lesson learned from recent operations in urban areas is the value of the fully integrated combined arms team. There is no denying the value of light Infantry forces during urban combat. However, urban combat never should be considered a purely Infantry task. Urban combat by units composed entirely of Infantrymen is a historical anomaly. Across the spectrum of combat action in urban areas, powerful combined arms teams produce the best results. Infantry units operating alone suffer from critical shortcomings that can be compensated for only by appropriate task organization with mechanized Infantry, armor, and engineers. These teams must be supported by closely integrated aviation, fire support, communications, and logistical elements. This chapter discusses tactics, techniques, and procedures (TTP) that can be employed by light Infantry and armored vehicles during the execution of UO. With modifications, the TTP in this appendix can be used by IBCT companies and platoons.

C-1. LIMITATIONS AND STRENGTHS OF LIGHT INFANTRY AND ARMORED VEHICLES

Because of the decentralized nature of urban combat and the need for a high number of troops to conduct operations in dense, compact terrain, Infantrymen will always represent the bulk of forces. At the small-unit tactical level, light Infantry forces have disadvantages that can be compensated for by mechanized Infantry or armor units. Conversely, tanks and mechanized Infantry face problems in the confines of urban areas that place them at a severe disadvantage when operating alone. Only together can these forces accomplish their mission with minimal casualties, while avoiding unnecessary collateral damage.

a. **Light Infantry Limitations.** Light Infantry limitations include the following:

(1) Light Infantry forces lack heavy supporting firepower, protection, and long-range mobility.

(2) Exposed light Infantry forces are subject to taking a high number of casualties between buildings.

(3) Light Infantry forces are more subject to fratricide-related casualties from friendly direct and indirect fire.

b. **Armored Vehicle Limitations.** Armored vehicle limitations include:

(1) Crewmen in armored vehicles have poor all-round vision through their vision blocks; they are easily blinded by smoke or dust. Tanks cannot elevate or depress their main guns enough to engage targets very close to the vehicle or those high up in tall buildings.

(2) If isolated or unsupported by Infantry, armored vehicles are vulnerable to enemy hunter/killer teams firing light and medium antiarmor weapons. Because of the abundance of cover and concealment in urban terrain, armored vehicle gunners may not be able to easily identify enemy targets unless the commander exposes himself to fire by opening his hatch or Infantrymen directing the gunner to the target.

(3) Armored vehicles are noisy. Therefore, there is little chance of them arriving in an area undetected. Improvised barricades, narrow streets and alleyways, or large amounts of rubble can block armored vehicles.

(4) Due to the length of the tank main gun, the turret will not rotate if a solid object is encountered, for example, a wall, post, and so forth. Heavy fires from armored vehicles cause unwanted collateral damage or can destabilize basic structures.

(5) The main gun of an M1A2 can only elevate +20 degrees and depress –9 degrees. Examples of standoff distances for buildings where a HEAT round is used are:

- Ground floor—2.5 meters from the target.
- 3d story—23 meters from the target.
- 18th story—132 meters from the target.

NOTE: Figure C-1 shows the difference in the capabilities of the BFV and the M1 tank with regard to fields of fire on urban terrain. Note that the BFV can engage a target 9 to 10 stories high at 20 meters, whereas an M1 tank requires 90 meters. Although the tank main gun has these limitations, targets can be engaged by the M2HB and M240 machine guns that are part of the tank's weapon system.

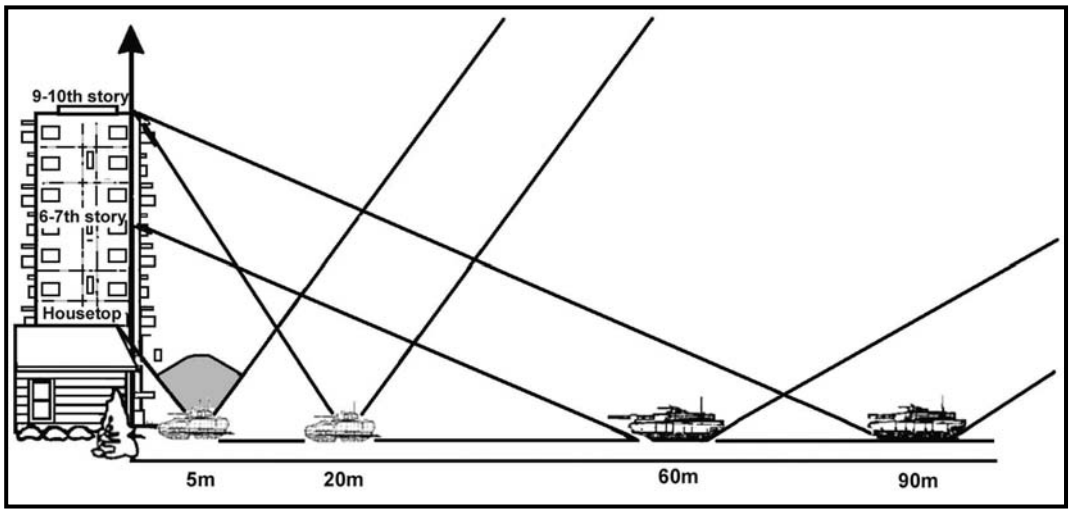

Figure C-1. Fields of fire on urban terrain.

c. **Light Infantry Strengths.** Light Infantry strengths include:

(1) Infantry small-arms fire within a building can eliminate resistance without seriously damaging the structure.

(2) Infantrymen can move stealthily into position without alerting the enemy. Infantrymen can move over or around most urban terrain, regardless of the amount of damage to buildings.

(3) Infantrymen have excellent all-round vision and can engage targets with small arms fire under almost all conditions.

d. **Armored Vehicle Strengths.** Armored vehicle strengths include:

(1) The thermal sights on armored vehicles can detect enemy activity through darkness and smoke, conditions that limit even the best-equipped Infantry.

(2) Armored forces, can deliver devastating fires, are fully protected against antipersonnel mines, fragments and small arms, and have excellent mobility along unblocked routes.

(3) Armored vehicles project a psychological presence, an aura of invulnerability that aids the friendly forces in deterring violence. Mounted patrols by armored vehicles can monitor large areas of a city while making their presence known to the entire populace, both friendly and unfriendly.

(4) Armored vehicles can move mounted Infantrymen rapidly to points where, together, they can dominate and isolate the cordoned area. With their long-range sights and weapons, armored vehicles can dominate large expanses of open area and thus free Infantry to isolate closer terrain and visual dead space.

(5) The mobile protected firepower of armored vehicles can be used to add security to resupply convoys and to extract wounded personnel under fire. The armored vehicle's smoke-generation capability can aid this and other small-unit actions.

C-2. ARMORED VEHICLE EMPLOYMENT CONSIDERATIONS

An effective use of armored combat vehicles in most tactical situations is en mass. Mechanized infantry/armored units operating in platoon, company team, and battalion

task force strength combine mobility, protection, and firepower to seize the initiative from the enemy and greatly aid friendly success. However, urban combat is often so decentralized, and avenues of approach for vehicles so canalized, that massed armored vehicles cannot be easily employed. However, the heavy firepower, mobility, and armor protection of the tank or BFV is still needed. This urban situation calls for fewer armored vehicles employed over broader areas. The decision to disperse rather than mass armored vehicles should be made only after a careful consideration of the METT-TC situation and anticipated operations in the near future. Decentralized armor support greatly increases a small Infantry unit's combat power. However, dispersed vehicles cannot be easily and quickly concentrated. Their sudden removal from throughout the combat area will necessitate a tactical pause for reorganization and a change of tactical tempo, which could disrupt the ongoing combat operation at a critical time.

a. **Employment.** Armored vehicles can support Infantry during urban combat operations by (Figure C-2):

- Providing shock action and firepower.
- Isolating objectives with direct fire to prevent enemy withdrawal, reinforcement, or counterattack.
- Neutralizing or suppressing enemy positions with smoke, high-explosive (HE), and automatic weapons fire as Infantry closes with and destroys the enemy.
- Assisting opposed entry of Infantry into buildings when doorways are blocked by debris, obstacles, or enemy fire.
- Smashing through street barricades or reducing barricades by fire.
- Obscuring enemy observation using smoke grenade launchers.
- Holding cleared portions of the objective by covering avenues of approach.
- Attacking by fire any other targets designated by the Infantry.
- Establishing roadblocks or checkpoints.
- Suppressing identified sniper positions.

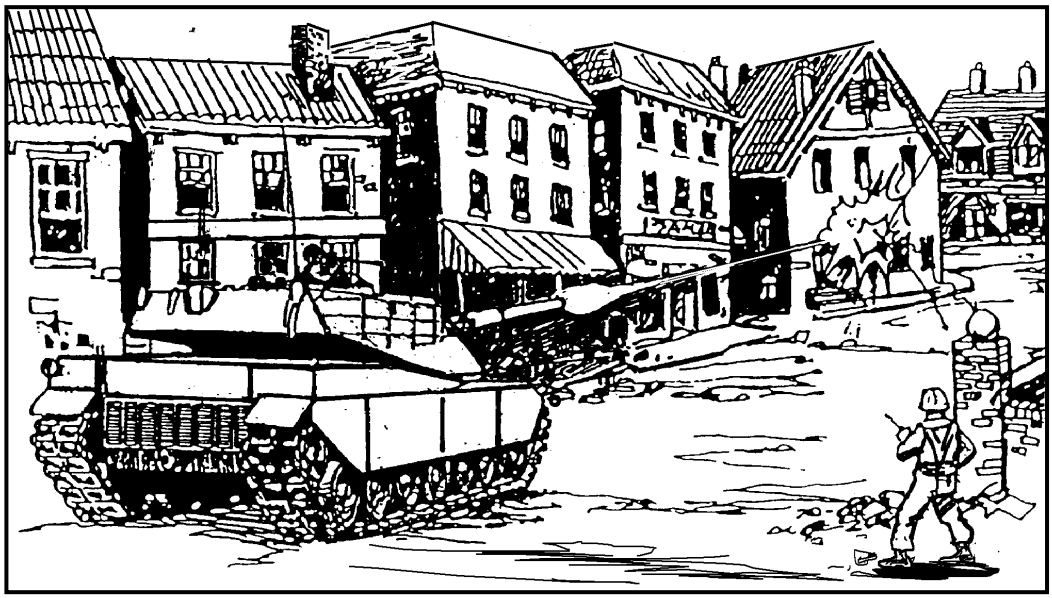

Figure C-2. Tank in direct fire, supported by Infantry.

CAUTION
When operating close to Infantry during combined arms urban operations, tanks should employ heat shields, normally used for towing, to deflect the intense heat caused by the exhaust.

c. **Vehicle Characteristics.** Fighting in urban areas is centered around prepared positions in houses and buildings. Such positions cover street approaches and are protected by mines, obstacles, and booby traps. Therefore, bridges, overpasses, and buildings must be inspected and cleared of mines before they are used. Reconnaissance parties must ascertain the weight-supporting capacity of roads, bridges, and floors to determine if they can support the weight of BFVs and tanks (Table C-1).

Vehicle	Weight (tons)	Height (feet)	Width (inches)
M1 Tank	68.7	10.14	143.75
BFV with reactive armor	33	11.3	142.2
BFV without reactive armor	28	11.3	130

Table C-1. Vehicle size and weight classification.

C-3. TASK ORGANIZATION WITH TANKS AT COMPANY TEAM LEVEL

The information in this paragraph refers to tank platoons. An attached or OPCON BFV platoon will have Infantry squads that can be employed in the scheme of maneuver. Therefore, platoon integrity with a BFV platoon should be maintained in urban combat and the BFV platoon should be used as a maneuver element. Normally, a tank platoon would be OPCON to a light, airborne, or air assault Infantry company during combined arms operations at the company team level. There are four basic techniques of task organizing the tank platoon into the light Infantry company for urban combat.

a. **Tank Platoon as a Maneuver Element.** In this technique, the tank platoon leader is responsible for maneuvering the tanks IAW the company team commander's intent. With this task organization, likely missions for the tanks would be to support by fire or to overwatch the movement of the Infantry. This task organization is the most difficult to maneuver tanks with the Infantry. However, the tank platoon leader can choose to maneuver the platoon by sections in order to execute the mission. This would provide greater flexibility in supporting the Infantry during the close fight.

b. **Tank Sections Under Infantry Platoon Control.** In this technique, tanks would be broken down into two sections and each section would be placed under the OPCON of an Infantry platoon, and maneuvered IAW the company team commander's intent. The company team commander relinquishes direct control of the tank maneuver to the Infantry platoon leaders. This technique is very effective in maintaining the same rate of progress between the tanks and the Infantry. However, Infantry platoon leaders are burdened with the additional responsibility of maneuvering tanks. The general lack of experience with tanks and the overall battlefield focus of the Infantry platoon leader can also affect this technique. This technique is best suited when contact with the enemy is expected and close continuous support is required for movement or clearing buildings.

c. **Tank Sections Under Company and Platoon Control.** The tank platoon can be broken down into two sections, one under company control, the other under platoon control. The selected maneuver Infantry platoon would have a tank section available to support the close fight. With this technique, the company team commander has a tank section to deploy at the critical place and time of his choosing. This task organization still allows support to the Infantry close fight while keeping additional support options in reserve for the commander to employ. The disadvantages to this technique are that an Infantry platoon leader is maneuvering tanks, instead of the tank platoon leader, and the tanks directly available to the company team commander are cut in half. This technique requires detailed planning, coordination, and rehearsals between the Infantry platoons and tank sections.

d. **Infantry Squads Under Tank Platoon Control.** In this technique, the company team commander has the option of placing one or more Infantry squads under the OPCON of the tank platoon leader. He may also retain all tanks under the control of the tank platoon leader or place a tank section under the OPCON of an Infantry platoon leader. This technique will give the company team commander a fourth maneuver platoon, and involves the tank platoon leader in the fight. It can work well in a situation where a mobile reserve that needs Infantry protection is required. This technique requires detailed planning, coordination, and rehearsals between the Infantry squads and tank platoon/sections.

e. **Guidelines.** None of the techniques described above are inherently better than the other one. The task organization must be tailored to accomplish the mission. Regardless of the technique selected, the guidelines below should be followed:

(1) Tanks should be used as sections. Single tanks may operate in support of Infantry, however it is preferable for tanks to operate as sections. If using tanks to shield squads and teams from building to building as part of the maneuver plan, the leader of the forward element needs to control the tanks.

(2) If the company commander is controlling the tanks, he needs to move forward to a position where he can effectively maneuver the tanks in support of the Infantry.

(3) The task organization should support the span of control. If the company commander is going to control the tanks, then there is no reason to task-organize the tanks by section under Infantry platoons.

(4) Tanks need Infantry support when the two elements are working together. Do not leave tanks alone because they are not prepared to provide local security during the operation. Tanks are extremely vulnerable to dismounted attack when operating on urban terrain. Tanks are most vulnerable and need local security when Infantry are in the process of clearing buildings. Tanks must remain relatively stationary for prolonged periods allowing threat AT teams to maneuver to a position of advantage.

f. **Mutual Support.** Infantry/tank teams work together to bring the maximum combat power to bear on the enemy. The Infantry provides the eyes and ears of the team. The Infantry locates and identifies targets for the tank to engage. It maneuvers along covered and concealed routes to assault enemy elements fixed and suppressed by tank fire. It provides protection for the tank against attack by enemy Infantry. Meanwhile, the tank provides heavy, continuous supporting fires against enemy strongpoints.

g. **Movement.** The Infantry normally leads movement through urban areas. The tanks follow and provide close overwatch. If the Infantry discovers an enemy position or encounters resistance, the tanks immediately respond with supporting fire to fix the enemy in place or suppress him and allow the Infantry to develop the situation. After sufficient time to develop the situation or conduct short-range reconnaissance, the Infantry squad leader directs the tank to move, if necessary, and identifies specific targets for the tank to engage.

h. **Coordination.** Coordination between tank and Infantry leaders must be close and continuous. The tank commander or driver may need to dismount and move, accompanied by the Infantry squad leader, to a position where the route or target can be seen better. Signals for initiating, shifting, or lifting fires must be understood by all. One of the greatest barriers to coordination and command and control in urban combat is the intense noise. Verbal commands should be backed up by simple, nonverbal signals.

i. **Communications.** The tank platoon leader and platoon sergeant maintain communications with the company team commander. Individual tanks and Infantrymen communicate with each other using one or more of these techniques.

(1) ***Visual Signals.*** Visual signals, either prescribed by SOP or coordinated during linkup, facilitate some simple communications.

(2) ***Wire***. M1-series tank crewmen can route WD-1 wire from the AM-1780 through the loader's hatch or vision block and attach it to a field phone on the back of the tank. WD-1 wire can also be run on a more permanent basis starting through the engine compartment, run through the hull/subturret floor, and attached to the turret's intercom

system via the driver's communications box. These techniques work better in a defensive situation than in an attack, where it might hinder tank movement or reaction time.

(3) ***FM Radios.*** FM radios or other short-range hand-held radios can be distributed during the linkup to provide a reliable means of communications between Infantry and supporting TCs. These radios allow the Infantry to use terrain more effectively in providing close in protection for the tank; Infantrymen can watch for enemy elements while limiting exposure to enemy fires directed against the tank. SOI information can be used between the tank platoon/sections and the company team headquarters and or the Infantry platoons. This SOI information is a fast reliable method of communications that does not require additional assets.

j. **Smoke.** The tank's smoke grenade launchers may be used both to protect the tank from enemy fire and to provide concealment for the Infantry forces as they either move across open areas or recover wounded. The use of smoke must be carefully coordinated. Although the tanks' sights can see through most smoke, Infantrymen are at a significant disadvantage when enveloped in dense smoke clouds. The smoke grenade launchers on the tank provide excellent, rapidly developed local smoke clouds, but the grenades produce burning fragments that are hazardous to Infantrymen near the tank and that can ignite dangerous fires in urban areas.

k. **Heavy Direct Fire Support.** Tanks and BFVs are valuable tools for assisting the assaulting forces during isolation of the objective area and seizing a foothold. As the Infantry then moves to clear the position and expand the foothold, the tanks are left in their initial support by fire positions. When possible, tanks should move to subsequent positions where their fires can be used to prevent enemy reinforcement and engage enemy forces withdrawing from the objective. However, at this time the tank crew must be very alert. Because of the nonlinear nature of urban battles, enemy forces may move to the rear or flanks of the now-isolated tanks and destroy them. If a small element of Infantry cannot be spared to support the tanks, both vehicles in the section should move to positions of cover and mutual support. Loaders and vehicle commanders should be alert, especially for enemy Infantry approaching from above, the rear, or from the flanks.

l. **Other Considerations.** Other considerations for employing tanks at company team level are:

(1) In planning, pay close attention to available terrain that supports tank cross-country movement. While the pace may be slower, security may be significantly enhanced.

(2) Involve tank platoon leaders and sergeants in the Infantry company-level IPB process. Their expertise will hasten the understanding of what tanks can and cannot do and aid the Infantry company commander in making the best employment decision.

(3) Tanks and BFVs can be used to carry ammunition, water, and other supplies to support the urban fight.

(4) To keep tanks and BFVs mission capable requires planning for refueling and rearming. Also, there may be a requirement to recover disabled vehicles. The company XO must coordinate with the battalion S4 to ensure that the proper logistical support is provided for the tanks or BFVs.

(5) Infantry company commanders must specifically allocate time in the planning process for precombat inspections (PCIs) for the tanks or BFVs.

(6) Conduct a combined arms rehearsal at the level that the tanks are task-organized. Try to replicate conditions for mission execution during rehearsals for example, day, limited visibility, civilians on the battlefield, host nation support, and ROE. Include the following:

- Graphic and fire control measures.
- Communications.
- Direct fire plans.
- Breach drills.
- Procedures for Infantry riding on tanks. (Tanks can move a maximum of nine personnel.)
- Techniques for using tanks as Infantry shields.

(7) To minimize casualties when moving outside or between buildings, do the following:

(a) Cover all possible threat locations with either observation or fire.

(b) For those areas that cannot be covered with observation or fire, use smoke to set a screen to block enemy observation of friendly movement.

(c) Move tanks forward to support Infantry movement. Position the tanks before the Infantry begins moving, whether the tanks are supporting by fire, being used as shields, or both.

(d) Preplan positions, if possible, but devise a marking system and communication signals to designate situational dependent positions to help maintain momentum. (For example, *The VS-17 panel from Building 2 means move to SBF 3*.)

(e) When using tanks as a shield for Infantry, move the tanks as close as possible to the start point to allow the Infantry the freedom of movement when exiting the building. Tanks need to move at the Infantry's rate of movement.

(f) When the distance between buildings is short, tanks can position themselves to block the open area from enemy fire.

(8) Use simple, clearly understood graphic control measures. The following are particularly useful for light/heavy operations in urban combat (Figure C-3, page C-10):

- Phase lines.
- Number and lettering systems for buildings.
- Tentative support by fire positions.
- No fire areas.

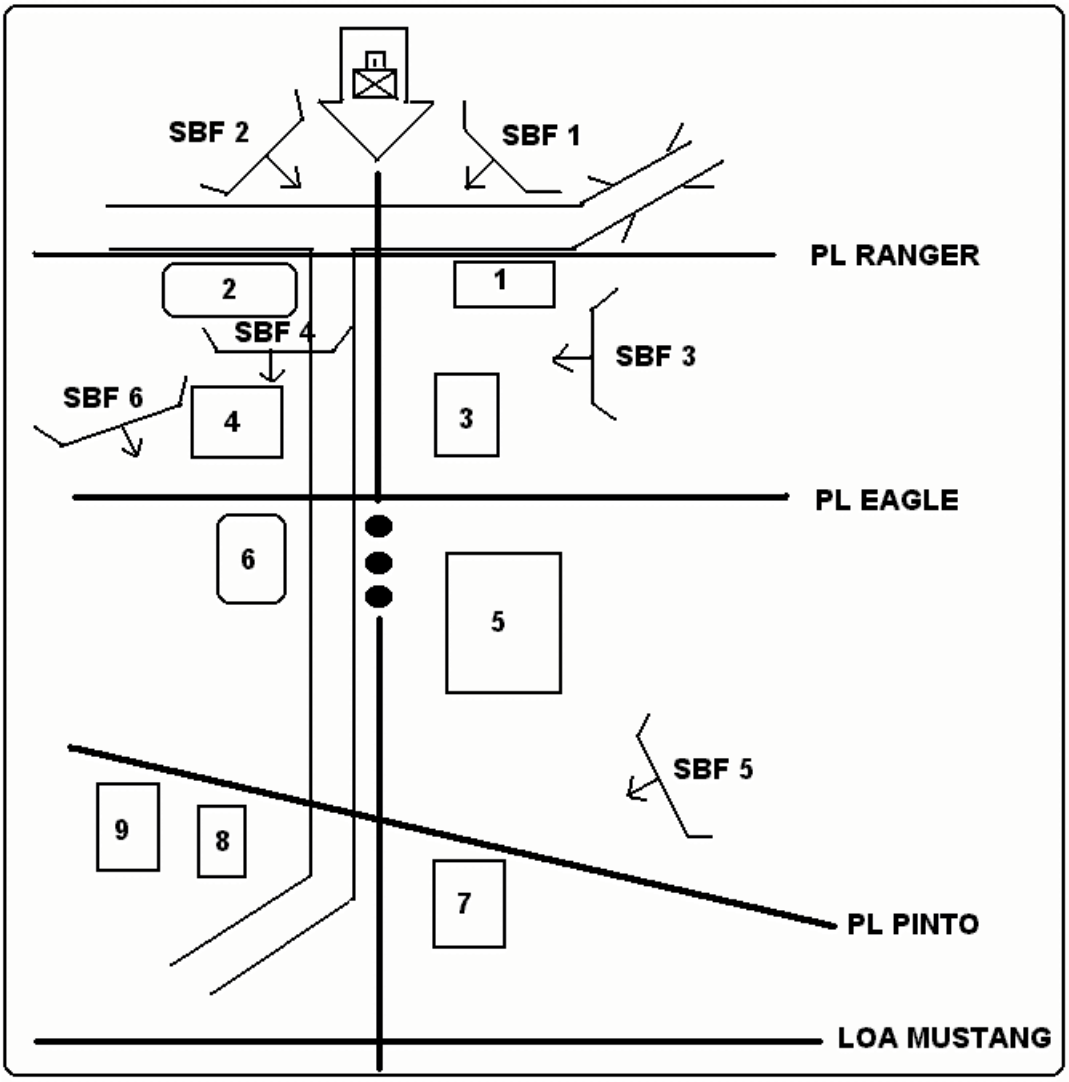

Figure C-3. Light/heavy graphic control measures.

(9) The company commander relies on the radio to help control the battle. It is essential that platoon leaders and RATELOs are well trained in sending reports. Constant reporting from the subordinate elements to the commander is critical for mission success.

C-4. ARMORED VEHICLE POSITIONS

Fighting positions for tanks and infantry fighting vehicles are essential to a complete and effective defensive plan in urban areas. Armored vehicle positions are selected and developed to obtain the best cover, concealment, observation, and fields of fire while retaining the vehicle's ability to move.

a. **Hull Down.** If fields of fire are restricted to streets, hull-down positions should be used to gain cover and fire directly down streets (Figure C-4). From those positions, tanks and BFVs are protected and can move to alternate positions rapidly. Buildings collapsing from enemy fires are a minimal hazard to the armored vehicle and crew.

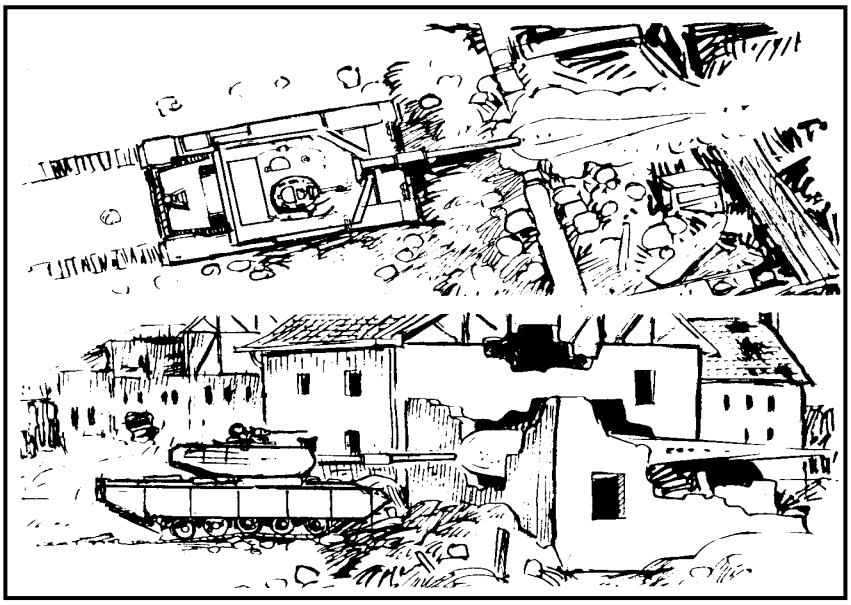

Figure C-4. Hull-down position.

b. **Hide.** The hide position (Figure C-5) covers and conceals the vehicle until time to move into position for target engagement. Since the crew will not be able to see advancing enemy forces, an observer from the vehicle or a nearby infantry unit must be concealed in an adjacent building to alert the crew. The observer acquires the target and signals the armored vehicle to move to the firing position and to fire. After firing, the tank or BFV moves to an alternate position to avoid compromising one location.

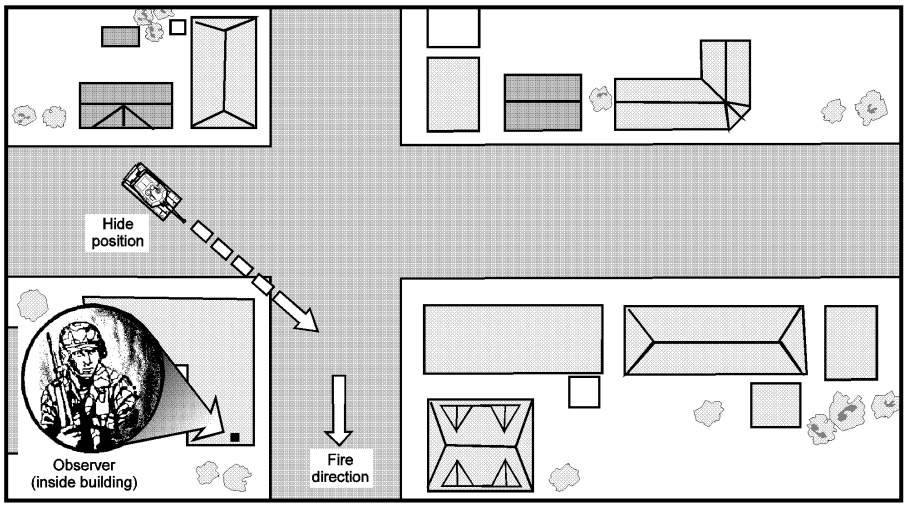

Figure C-5. Hide position.

c. **Building Hide.** The building hide position (Figure C-6, page C-12) conceals the vehicle inside a building. If basement hide positions are inaccessible, engineers must

evaluate the building's floor strength and prepare for the vehicle. Once the position is detected, it should be evacuated to avoid enemy fires.

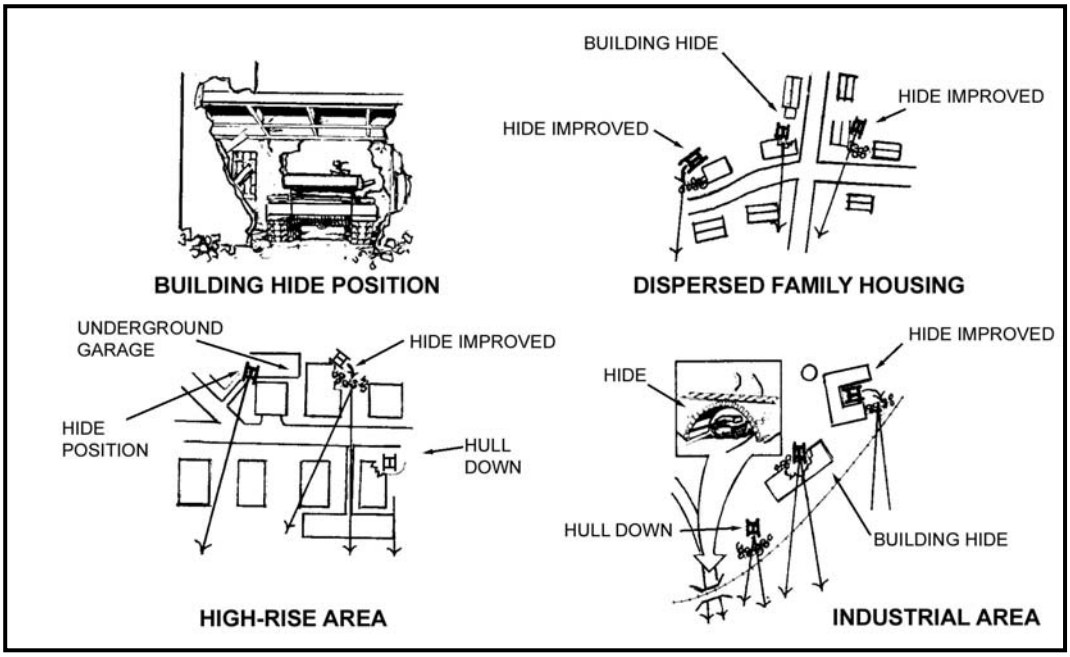

Figure C-6. Building hide position.

C-5. TRANSPORTING INFANTRY

At times, the tank platoon may be required to transport Infantrymen on its tanks (Figure C-7). This is done only when contact is not expected. If the tank platoon is moving as part of a larger force and is tasked to provide security for the move, the lead section or element should not carry infantry.

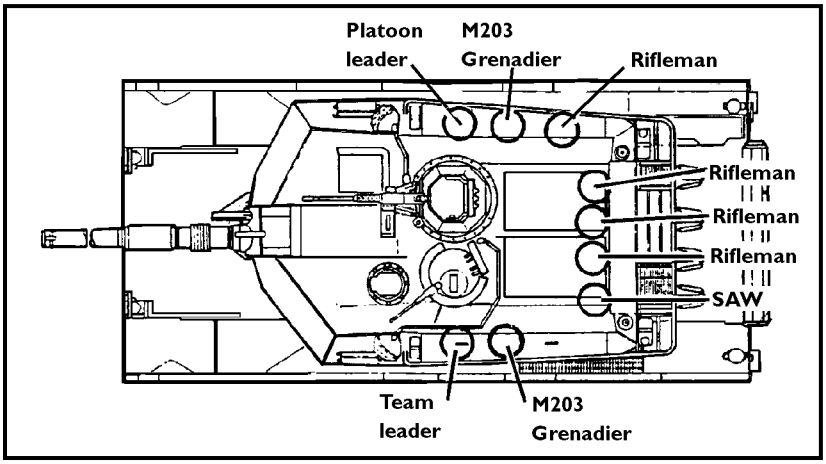

Figure C-7. Sample positions for Infantry riding on a tank.

a. **Procedures, Precautions, and Considerations.** Infantry and armor leaders must observe the following procedures, precautions, and considerations when Infantrymen ride on tanks:

(1) Infantrymen should thoroughly practice mounting and dismounting procedures and actions on contact.

(2) Infantrymen must always alert the TC before mounting or dismounting. They must follow the commands of the TC.

(3) Infantry platoons should be broken down by squads, similar to air assault chalks, with the infantry platoon leader on the armor platoon leader's vehicle and the infantry platoon sergeant on the armor platoon sergeant's vehicle.

(4) Platoon leaders, platoon sergeants, and team leaders should position themselves near the TC's hatch, using the external phone (if available) to talk to the TC and relay signals to the unit.

(5) If possible, the lead vehicle should not carry Infantrymen. Riders restrict turret movement and are more likely to be injured or killed on initial contact.

(6) Whenever possible, Infantrymen should mount and dismount over the left front slope of the vehicle. This ensures that the driver can see the infantrymen and that the infantrymen do not pass in front of the coax machine gun. Infantrymen must ensure that they remain behind the vehicle's smoke grenade launchers. This will automatically keep them clear of all weapon systems.

(7) Infantrymen must always have three points of contact with the vehicle, and they must watch for low-hanging objects such as tree branches.

(8) Infantrymen should wear hearing protection.

(9) Infantrymen should not ride with anything more than their battle gear. Rucksacks should be transported by other means.

(10) Infantrymen should scan in all directions while riding. They may be able to spot a target the vehicle crew does not see.

(11) Infantrymen should be prepared to take the following actions on contact:

- Wait for the vehicle to stop.
- At the TC's command, dismount **IMMEDIATELY** (one fire team on each side). **DO NOT** move forward of the turret. **DO NOT** dismount a vehicle unless ordered or given permission to do so.
- Move at least 5 meters to the either side of the vehicle. **DO NOT** move behind or forward of the vehicle.
- **DO NOT** move in front of vehicles unless ordered to do so. Main gun discharge overpressure can inflict sever injury or death to forward dismounted Infantrymen. (See Figure C-8 and the warning on page C-14.)
- **DO NOT** dangle arms or legs, equipment, or anything else off the side of a vehicle; they could get caught in the tracks, causing death, injury, or damage to the equipment or vehicle.
- **DO NOT** place too many riders on the vehicle.
- **DO NOT** fall asleep when riding. The warm engine may induce drowsiness; a fall could be fatal.
- **DO NOT** smoke when mounted on a vehicle.
- **DO NOT** stand near a moving or turning vehicle at any time. Tanks have a deceptively short turning radius.

DANGER

THE OVERPRESSURE FROM THE TANK'S 120-MM CANNON CAN KILL A DISMOUNTED INFANTRYMAN WITHIN A 90-DEGREE ARC EXTENDING FROM THE MUZZLE OF THE GUN TUBE OUT TO 200 METERS.

FROM 200 TO 1,000 METERS ALONG THE LINE OF FIRE, ON A FRONTAGE OF ABOUT 400 METERS, DISMOUNTED INFANTRY MUST BE AWARE OF THE DANGER FROM DISCARDING SABOT PETALS, WHICH CAN KILL OR SERIOUSLY INJURE PERSONNEL.

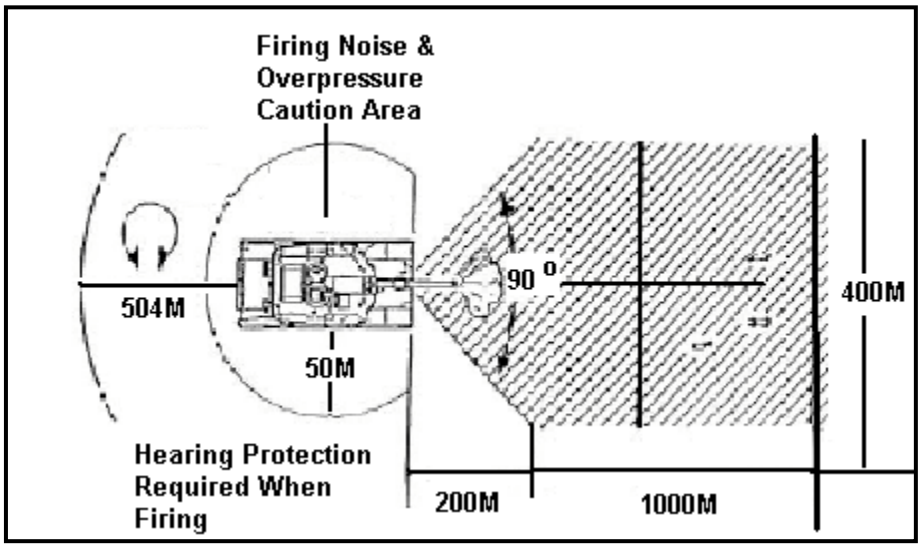

Figure C-8. Danger areas around a tank firing a 120-mm main gun.

b. **Additional Considerations and Precautions.** Additional considerations and preparations for transporting Infantrymen include the following:

(1) The armor—

- Uses main-gun fire to reduce obstacles or entrenched positions for the Infantry.
- Takes directions from the Infantry ground commander (platoon leader/platoon sergeant/squad leader) to support their fire and maneuver.
- Provides reconnaissance by fire for the Infantry.
- Should know and understand how the Infantry clears buildings, how they mark cleared buildings, the casualty evacuation plan, signal methods, engagement criteria for tank main gun, front line trace reporting, ground communication from the tank with the dismounted personnel.

- Uses its night vision capability to augment and supplement the Infantry's night vision capabilities.

(2) The Infantry—

- Provides real time information for the tank crewmen to help them overcome tank noise and the lack of ground situational understanding.
- Provides reconnaissance and fire direction of enemy positions for main gun attack.

(3) Considerations for dismounted tank security include the following:

- Tank crewmen should rehearse the mounting and dismounting of Infantrymen from their vehicle, briefing the Infantrymen on safety procedures for the vehicle and weapon systems.
- Tank commanders need to rehearse communicating with dismounted soldiers via TA-1 and DR-8 in the bustle rack.

(4) Vehicle preparation for combat in urban terrain should cover these procedures:

- Keep at least one ballistic shield to the "Dog House" closed (most engagements will be under boresight range and the battlesight technique will suffice).
- Place sandbags around antenna connections and electrical wiring on the turret top.
- Place extra coax ammunition inside the turret.
- Remove all highly flammable products from the outside of the vehicle and from the sponson boxes.

C-6. ARMOR VEHICULAR, WEAPONS, AND MUNITIONS CONSIDERATIONS

Numerous factors related to tanks and their organic weapons and munitions affect the tank platoon's urban operation planning and execution, including the following:

a. The preferred main gun rounds in the urban environment are HEAT, MPAT (ground mode), and MPAT-OR (XM908). These all perform much better than sabot rounds against bunkers and buildings.

b. HEAT ammunition will open a larger hole in reinforced concrete or masonry structures than MPAT or MPAT-OR (XM908). Both MPAT and MPAT-OR, however, offer greater incapacitation capability inside the structure.

c. HEAT ammunition arms approximately 60 feet from the gun muzzle. It loses most of its effectiveness against urban targets at ranges of less than 60 feet.

d. MPAT and MPAT-OR rounds arm approximately 100 feet from the muzzle of the gun. Because of the shape and metal components of the projectiles, however, this ammunition remains effective at ranges of less than 100 feet.

e. Sabot petals, including those on MPAT and MPAT-OR, endanger accompanying infantry elements. They create a hazard area extending 70 meters on either side of the gun-target line out to a range of 1 kilometer.

f. The tank's main gun can depress only to -10 degrees and can elevate only to +20 degrees, which creates considerable dead space for the crew at the close ranges that are typical in the urban environment.

g. The external M2 HB machine gun can deliver a heavy volume of suppressive fire and penetrate light construction, buildings, and most barricades. The M2 HB machine

gun can elevate to +36 degrees; however, the TC must be unbuttoned to fire the M2 on the M1A2 or M1A2 SEP.

h. The M240 coax machine gun can effectively deliver suppressive fires against enemy personnel and against enemy positions that are behind light cover.

i. The loader's M240 machine gun can effectively deliver suppressive fire against enemy personnel and against enemy positions that are behind light cover; however, the loader must be unbuttoned to operate it. This weapon may be dismounted and used in a ground role if units are equipped with the M240 dismount kit.

j. When buttoned up, the tank crew has limited visibility to the sides and rear and no visibility to the top.

NOTE: FM 17-12-1-1 explains special uses for tank-mounted machine guns in the urban environment.

C-7. OFFENSIVE CONSIDERATIONS AND TACTICS, TECHNIQUES, AND PROCEDURES FOR THE BRADLEY FIGHTING VEHICLE

The mechanized Infantry platoon provides a very flexible heavy direct fire support asset to light Infantry companies conducting operations on urban terrain. The 25-mm cannon and 7.62-mm coax machine gun, combined with the additional Infantry, Javelin, and TOW ATGMs, provide the company team commander powerful combat multipliers during urban combat.

NOTE: While this paragraph specifically discusses BFVs, much of the information also applies to the use of tanks.

a. **Target Engagement.** Streets and alleys are natural firing lanes and killing zones. Because of this, all vehicular traffic is greatly restricted and canalized, and subject to ambush and short-range attack. Tanks are at a disadvantage because their main guns cannot be elevated enough to engage targets on the upper floors of tall buildings. The BFV, with +60 to -10 degrees elevation of the 25-mm gun and 7.62-mm coax machine gun, has a much greater ability to engage targets in urban terrain.

b. **General Considerations When Using BFVs.** Light Infantry companies may be task-organized with mechanized Infantry platoons when conducting operations in urban terrain. A BFV platoon is capable of providing its own Infantry support. Generally, BFVs should not be separated from their Infantry. Working as a team, Infantrymen (the rifle squads) provide security for the vehicles; the BFVs provide critical fire support for the Infantry company team.

(1) ***Movement.*** When moving, if the street is large enough, BFVs should stay close to a building on either side of the street. This allows each BFV to cover the opposite side of the street. BFVs can button up for protection, but the BFV crew must remain alert for signals from Infantry. Coordination between mounted and dismounted elements is critical in urban terrain.

(2) ***ATGMs.*** The BFV lacks adequate armor protection to withstand medium to heavy ATGM fire. It is normally employed after the area has been cleared of ATGM positions or on terrain dominating the city to provide long-range antiarmor support or fire suppression. LAWs, AT4s, Dragons, or Javelins provide a significant amount of the BFV

platoon's short-range antiarmor fires in urban areas; the TOWs provide long range antiarmor fires. The BFV's 25-mm gun and machine gun are employed while providing direct fire support.

c. **Organization and Tasks.** The BFV platoon is comprised of mounted and dismounted elements. Based on the company commander's guidance and the factors of METT-TC, the BFV platoon leader will normally determine how his elements will be deployed. (The organization of the BFV platoon, sections, and squads in the 3-by-9 configuration is shown in Figure C-9, page C-18.)

(1) ***Offensive Task Organization.*** During offensive operations, the BFV platoon is normally given the mission of providing support for the company team. The company team commander generally will not separate the dismounted element from the mounted element, since the BFVs must have Infantry support during urban combat. If the dismounted element is needed for other tasks, enough local security must be left with the BFVs in order to protect them against enemy counterattack or anti-armor ambushes.

(2) ***Assault Tasks.*** An Infantry company team commander may give the BFV platoon the mission of performing assault tasks. The BFV platoon's Infantry would perform these tasks operating in the same manner as light Infantry platoons and squads. (See Chapters 3 and 4.) If the Infantry is used in this role, enough local security must be left with the BFVs to protect them.

(3) ***Support Tasks.*** (See paragraph C-2a.). The most likely tasks that will be given to a BFV platoon supporting a light Infantry company in urban combat will be those assigned to the support element. Direct fire support and other assistance to facilitate the advance of the assault element is provided by the support element. The BFV platoon is well suited to act as the support element for the light Infantry company team during offensive operations. The BFV platoon leader, acting as the support element leader, can provide command and control over his platoon and other support element assets. Specific BFV platoon tasks include, but are not limited to, the following:

(a) Suppressing enemy gunners within the objective building(s) and adjacent structures. This is accomplished with the 25-mm gun and 7.62-mm coax machine gun, TOWs, Infantry antiarmor, and small arms weapons (Figure C-10, page C-19).

(b) Breaching walls en route to and in the objective buildings.

(c) Destroying enemy positions within a building with the direct fire of the 25-mm gun and the 7.62-mm coax machine gun (when the wall is constructed of light material).

(d) Providing replacements for the assault element.

(e) Providing a mobile reserve for the company team.

(f) Providing resupply of ammunition and explosives.

(g) Evacuating casualties, prisoners, and noncombatants.

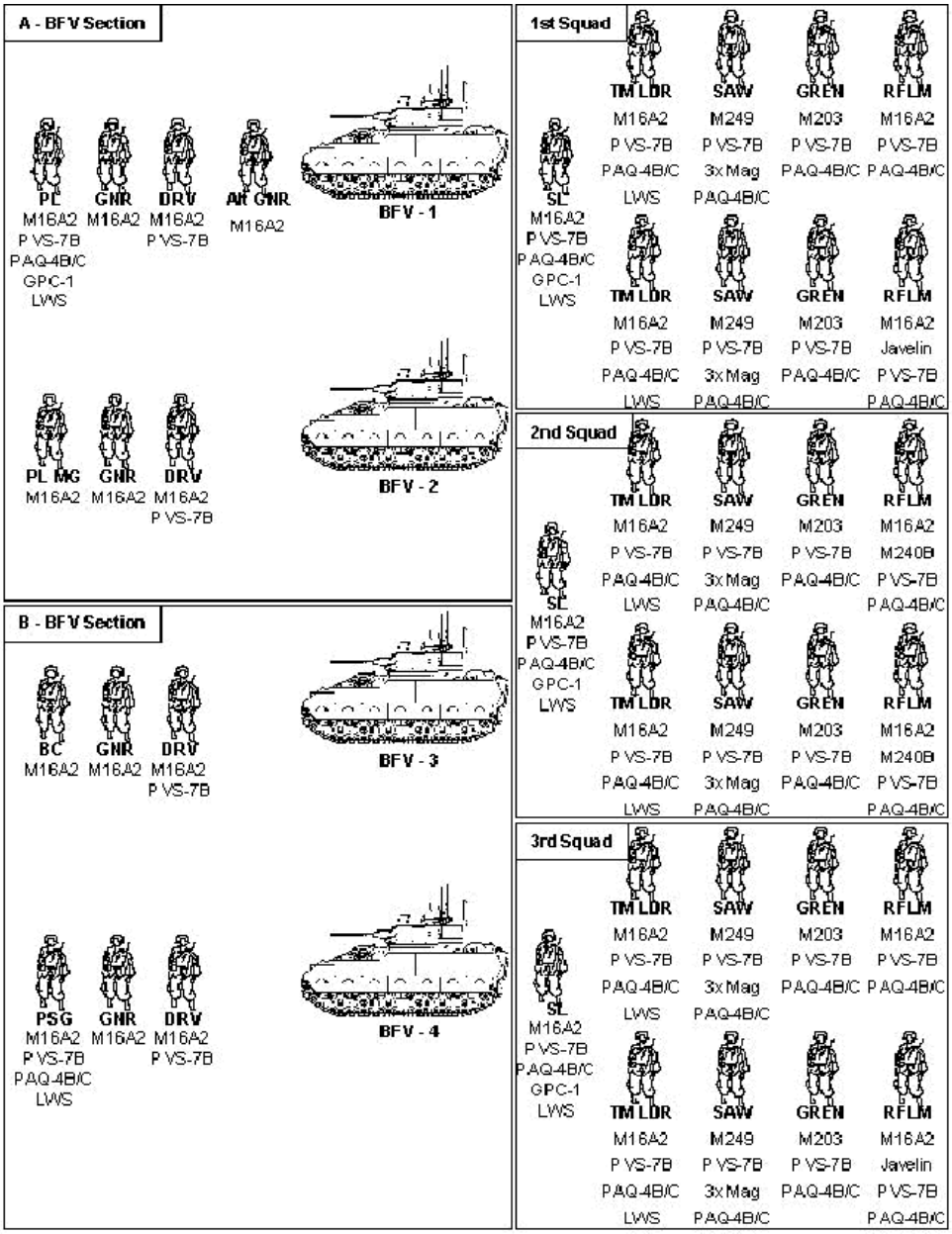

Figure C-9. Organization of BFV platoon.

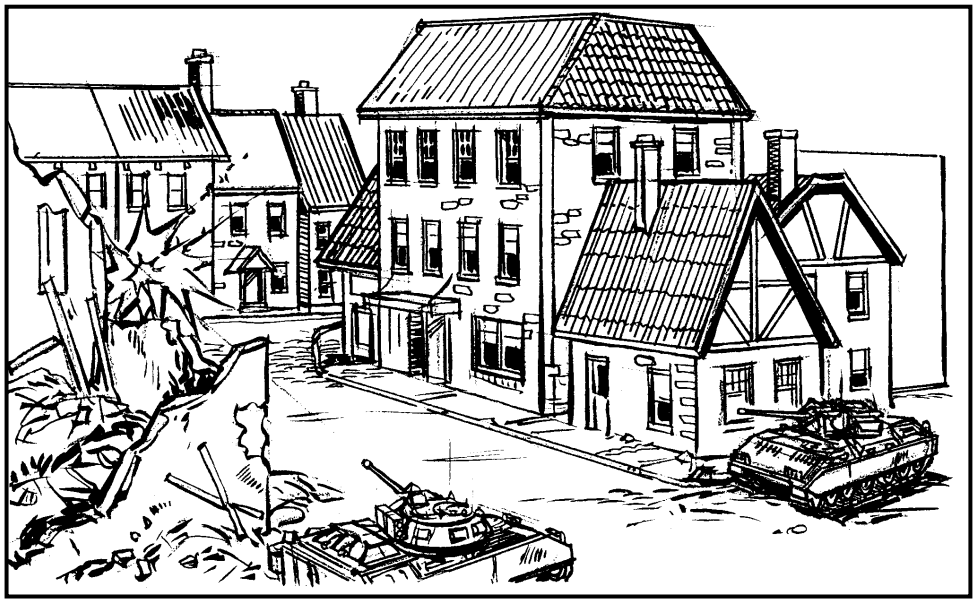

Figure C-10. Suppression by 25-mm gun.

d. **Direct Fire Support.** The BFV is best used to provide direct fire support to Infantry. The BFV should move behind the Infantry, when required, to engage targets located by the rifle squads (Figure C-11). The dash speed (acceleration) of the BFV enables it to rapidly cross streets, open areas, or alleys.

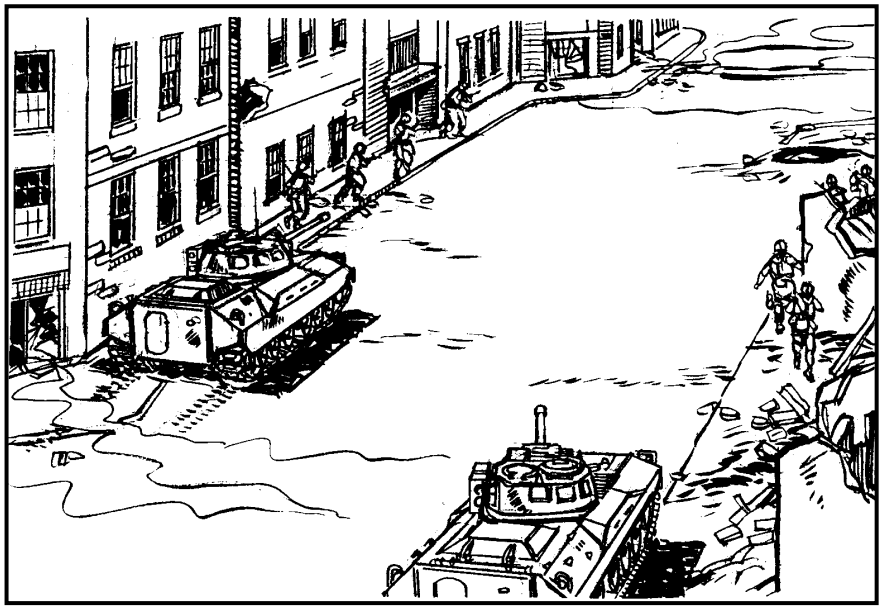

Figure C-11. Moving with Infantry.

(1) ***Weapons***. The BFV mounted element provides fire with its 25-mm gun and 7.62-mm coax machine gun for Infantry on the opposite side of the street. The 25-mm gun is the most effective weapon on BFVs while fighting in urban terrain (Figure C-12).

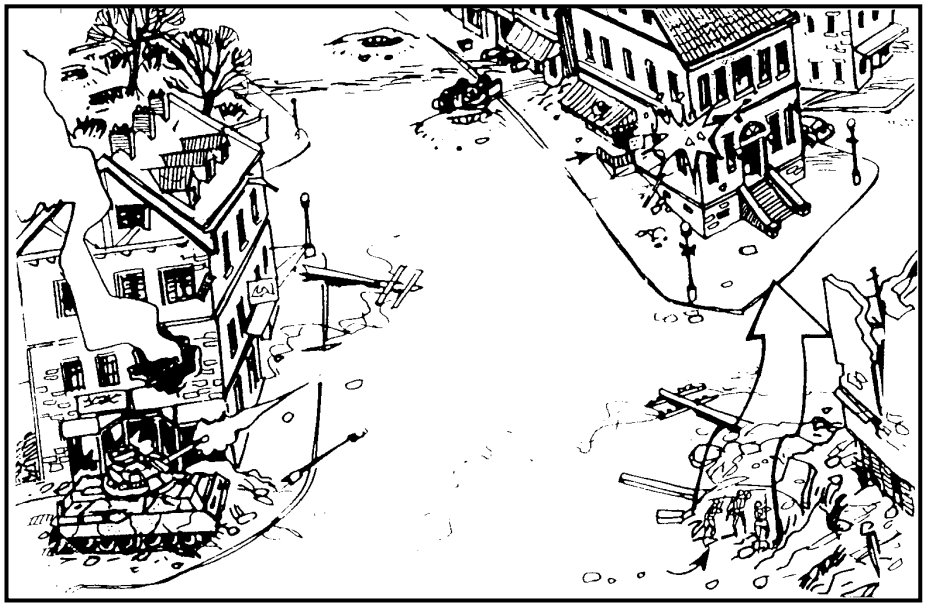

Figure C-12. 25-mm gun support for Infantry.

(2) ***Safety Considerations.*** The use of the 25-mm gun in support of Infantry requires safety considerations.

- High-explosive 25-mm rounds arm 10 meters from the gun and explode on contact.
- APDS rounds discard their plastic sabots to the front of the gun when fired. This requires a 100-meter safety fan (17 degrees either side of the gun-target line for 100meters) to the front of 25-mm gun (Figure C-13). This means that exposed soldiers cannot go any farther forward than the end of the 25-mm's muzzle or must be a minimum of 100 meters from the muzzle blast.

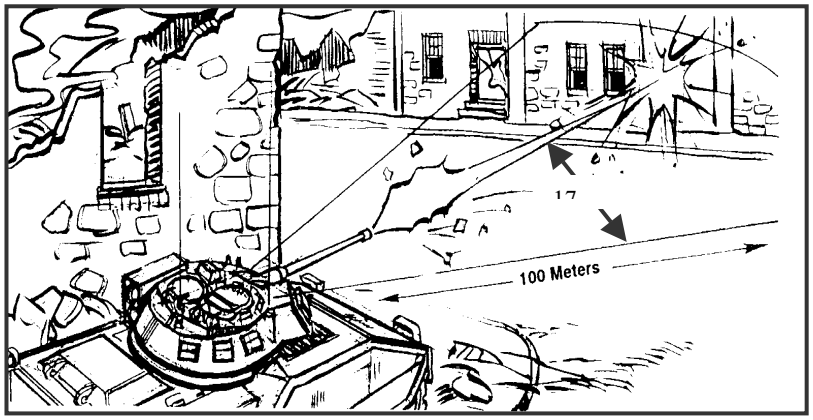

Figure C-13. Safety fan for 25-mm gun.

(3) ***Use of Smoke.*** The BFVs' engine exhaust smoke system can be used in urban areas to cover the movement of Infantry. The BFV can also provide a smoke screen by using its smoke grenade launchers. This requires careful analysis of wind conditions to ensure that the smoke does not affect friendly units. This is a difficult task since wind currents tend to be erratic between buildings. The smoke can also screen the movements of the BFVs after the Infantry moves (Figure C-14).

NOTE: On-board smoke only works when the vehicle is using diesel fuel. It will not work with JP-8 fuel.

Figure C-14. Smoke screens movement of Infantry.

e. **Using the BFV to Isolate a Building.** To isolate a building, the BFVs take an overwatch position (Figure C-15). They fire the 25-mm gun and 7.62-mm coax machine gun, and adjust indirect fire to suppress enemy troops in the building and in nearby buildings who can fire at the assault element.

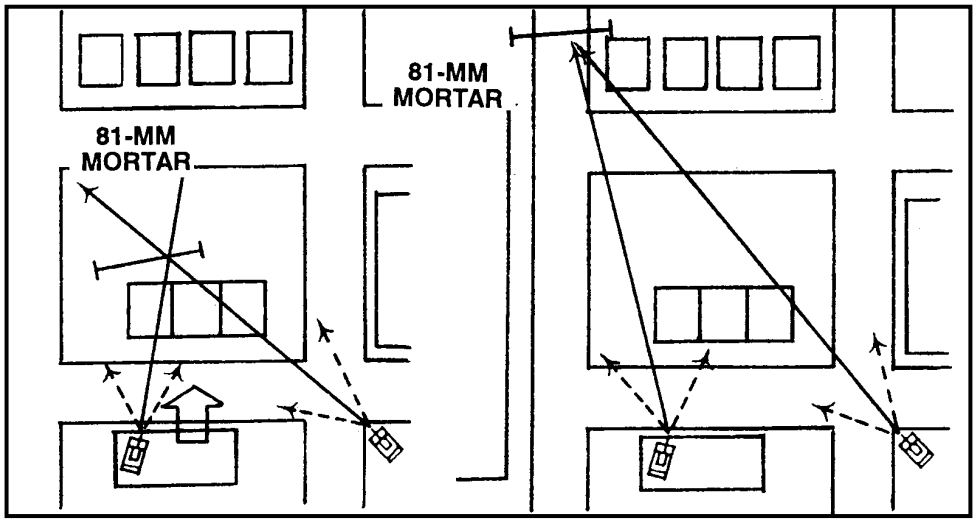

Figure C-15. Isolation of a building and shifting of fires.

C-8. DEFENSIVE CONSIDERATIONS AND TACTICS, TECHNIQUES, AND PROCEDURES FOR THE BFV

The BFV can provide a valuable combat multiplier in the defense. Infantry in the BFV platoon will defend in the same manner as light Infantry platoons. The following are typical defensive missions that may be given to a BFV platoon:

- Providing fire support for Infantry and mutual support to other BFV teams.
- Destroying enemy armored vehicles and direct fire artillery pieces.
- Destroying or making enemy footholds untenable by fire using the 25-mm gun.
- Providing rapid, protected transport for organic rifle teams or other Infantry elements.
- Reinforcing threatened areas by movement through covered and concealed routes to new firing positions.
- Providing mutual support to other antiarmor fires.
- Providing a mobile reserve and counterattack force.
- Providing resupply of ammunition and other supplies to the Infantry.
- Evacuating casualties, prisoners, and noncombatants.

NOTE: The overall value of the BFV to the defense must be weighed against the need to resupply or to evacuate casualties.

The BFVs are integrated into the company team defensive fire plan. The 25-mm gun and 7.62-mm coax machine gun fields of fire cover streets and open areas; TOWs are used to cover armor avenues of approach. Once placed in position, BFVs should not be moved for logistical or administrative functions. Other vehicles should accomplish these functions, when possible.

a. **Positioning of BFVs and Weapons.** Once the company team commander gives the BFV platoon leader his mission, the platoon leader will position his BFVs and Infantry. Dismounted machine guns should be positioned to have grazing fire. For the coax to have grazing fire, the BFV must be in a hull-down position. BFVs are assigned primary, alternate, and supplementary positions. ATGMs should be positioned on upper stories for longer range and to permit firing at the tops of tanks. These positions should permit continuous coverage of the primary sectors and all-round defense.

b. ***Engagement Ranges.*** Due to the close engagement ranges on urban terrain, the 25-mm gun and 7.62-mm coaxial machine gun are used more than ATGMs. The antiarmor capability of the BFV is degraded by short ranges and must be supplemented by Dragons, Javelins, and AT4s (Figure C-16). ATGM and AT positions should be placed where they can support the BFV but must not attract enemy attention to the BFV location. Dragons, Javelins, and AT4s are much more effective against the flanks, rear, and tops of enemy armored vehicles and should be positioned to attack those areas. The TOWs are also employed against enemy armored vehicles.

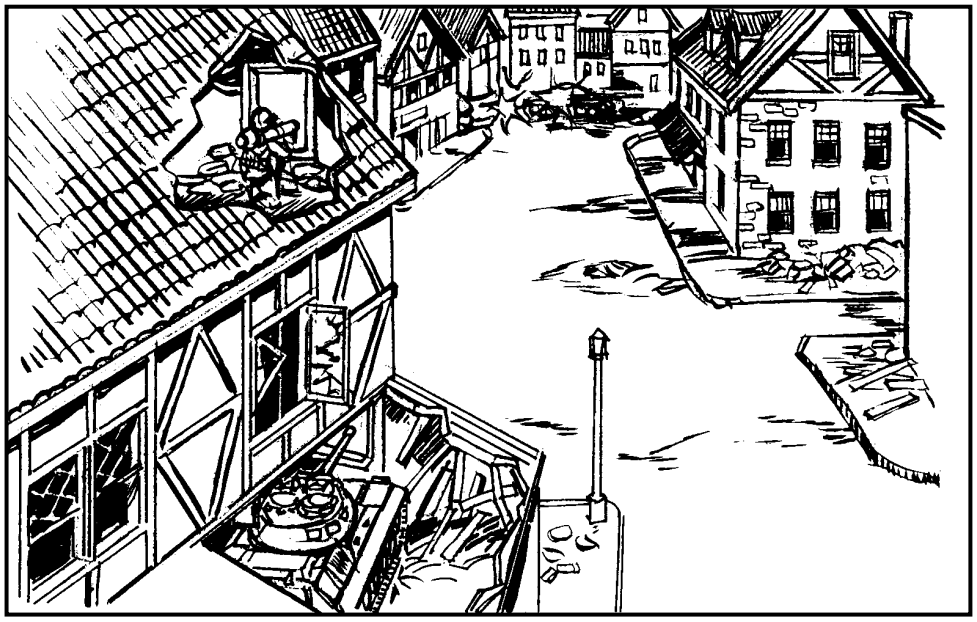

Figure C-16. AT4 position supporting BFV.

NOTE: TOWs cannot be dismounted. Company team commanders must determine which weapon will work most effectively against the threat he is anticipating. Ideally, the BFV should be positioned to take advantage of all the weapons on the vehicle.

c. **Integration of Fires.** All of the BFV's crew-served weapons are integrated with the rest of the company team's weapons and assets. The positions are recorded on a company sector sketch and forwarded to battalion.

C-9. STABILITY AND SUPPORT OPERATIONS CONSIDERATIONS AND TACTICS, TECHNIQUES, AND PROCEDURES

See Chapter 14 for information on stability operations and support operations.